36 366 001 **GET E "TOUCH FREE" ELECTRONIC CENTERSET WITH TEMPERATURE CONTROL LEVER**

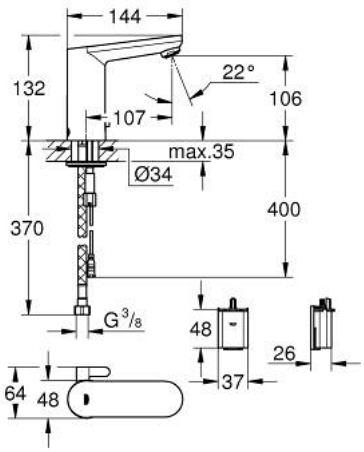

PRODUCT DESCRIPTION

- Colour: chrome
- With infrared sensor for bi-directional communication for monitoring, configuration and servicing
- Single hole installation
- 6V lithium-battery, type CR-P2
- Battery lifetime: approx. 7 years (150 actuations a day)
- Multistage battery status display
- mixing device with adjustable hot water limiter
- with integrated solenoid valve
- external battery
- mousseur 5.7 l/min
- Dirt strainers
- Flexible connection hoses
- Non-return valve
- Rapid installation system
- 7 pre-set programs:
- Auto flush
- Thermal disinfection
- Cleaning mode
- Additional functions and precise settings by remote control 36 407
- Noise classification 1 in accordance with DIN4109 incl. certificate
- type of protection faucet IP 59K
- CE approved
- min. recommended pressure 1.0 bar

36 366 001 **GET E "TOUCH FREE" ELECTRONIC CENTERSET WITH TEMPERATURE CONTROL LEVER**

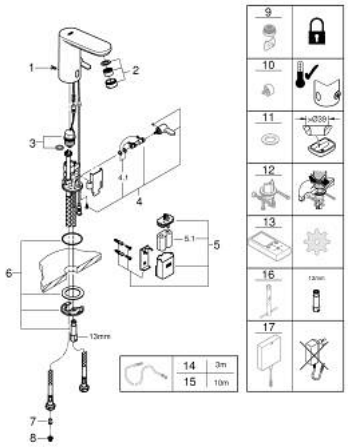

SPARE PARTS, June 2018 – now

1: Screws (Spare part-nr. 4283100M)

2: Flow control (Spare part-nr. 48159000)

3: Solenoid valve (Spare part-nr. 42469000)

4: mixing unit (Spare part-nr. 42401000)

4.1: O-ring (Spare part-nr. 4284000M)

5: Battery housing (Spare part-nr. 42393000)

5.1: Battery (Spare part-nr. 42886000)

6: Mounting set (Spare part-nr. 42400000)

7: Non-return valve (Spare part-nr. 4257200M)

8: Filter (Spare part-nr. 4241300M)

9: Flow control (Spare part-nr. 36133000)*

10: Hidden mixing device (Spare part-nr. 42408000)*

11: Escutcheon (Spare part-nr. 36370000)*

12: Rotation lock (Spare part-nr. 36276000)*

13: Remote control (Spare part-nr. 36407001)*

14: Power Extension Cable (Spare part-nr. 36340000)*

15: Power Extension Cable (Spare part-nr. 36341000)*

16: Mounting wrench (Spare part-nr. 19017000)*

17: Power supply switch (Spare part-nr. 36338000)*

* Optional accessories