25 119 00A **BAULOOP FOUR-HOLE ROMAN BATHTUB FAUCET WITH HANDSHOWER**

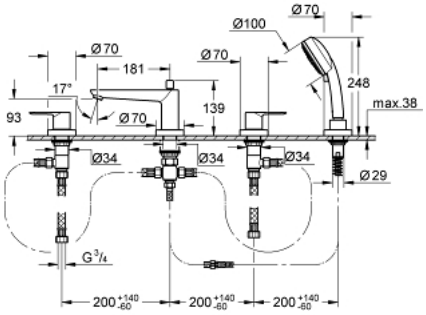

PRODUCT DESCRIPTION

- Colour: chrome
- Consisting of:
- 3/4" ceramic cartridge (90° turn)
- Metal lever
- bath spout with manual diverter bath/shower
- hand shower Tempesta Cosmopolitan 100 (27 572)
- Metal shower hose 1500 mm
- Flexible connection hoses
- Protected against backflow
- GROHE LongLife finish